TEKNIC

CE UL

Control & Signalling devices Ø 22.5 plastic construction
Modular Series

TEKNIC

Control and Signalling Devices Ø 22.5 "PLASTIC CONSTRUCTION ECONOMY" type 103 P Series

Salient Features
This range of Ø 22.5 103 P series Push Button switches, Selector Switches, Emergency Switches, Pilot Lights in engineering Plastic Construction, have been designed to provide our OEM customers and Panel Builders a compact series of products with a competitive edge. This range ensures cost efficiency and provides a high level of reliability and economy. Technical Features includes:

●Safe in Operation ●Enables Control on inventory ●Reliable performance ●All in one function - complete function in one order code ●Low built in Depth ●Single or two built in electrically separated contacts are provided (either 1 NO, 1NC, 2NO, 2NC or 1NO+1NC) ●Economy of Space ●Aesthically elegant ●Robust design ●Larger operating surface than Ø 30.5 ●Easy Mounting

PUSH BUTTONS
The monoblock push buttons are circular in design, Ø 22.5. The combination is of an actuator and contact element, single or two built in electrically separated contacts 1NO, 1NC, 2NO, 2NC or 1NO+1NC. Different varieties / colours of Actuators available are described separately herewith with their images, where the respective dimensions of the devices are also given.

PILOT LIGHTS:
Pilot Lights are available with integral LEDs, suitable for operating at various voltages, namely 6V, 12V, 24V, 30V, 48V, 63V, 110V, 125V AC/DC, 240VAC & 220VDC. Any other voltage & test function available on request. The pilot lights can also be offered with dual colour LEDs with different colour combinations for 12V to 240V AC/DC. The pilot lights with integral LEDs are also available suitable for operating at any universal voltage between 24V and 240V AC/DC.

Terminals
Push Button Contacts and Pilot Lights are designed to have shrouded terminals with Combi Screws.

Fixing
The compact monoblock range can be easily combined with our well known Ø 22.5 modular Pilot Devices as they have the similar front of the board design

Specifications of 103 series:
Details of these control devices, Ø 22.5 are detailed below:

A. Mechanical Durability

Push Button	Spring Return	Million Operations	1
	Selector		0.5
	Latching Type		0.1
	Mushroom Type		0.02

B. Standards & Conditions

Applicable Standard	UL 508, IEC 60947-5-1, CSA 22.2
Degree of Protection	IP54 (as per IEC 60947-5-1)
Operating Conditions	+70˚C to -25˚C
Mounting	Confirming to IEC 60947-5-1 Finished fixing hole: 22.5mm recommended (22.3+0.4/0) Fixing Centres: 30*40mm Min, (Unless otherwise indicated) Mounting Panel thickness: metal: 1 to 6mm, double insulated: 2 to 6mm

C. Electrical Characteristics

Rating		**For AC:** C300=120V, make current 15A & break current 1.5A (Thermal current = 2.5A) **For DC:** R300= 125V make or break current 0.22A, (Thermal current = 1.0A)
Type of contact		N/C or N/O or C/O Slow Break
Positive operation		All functions incorporating an NC contact have positive opening (IEC 60947-5-1)
Terminal Capacity	Cabling	2X1.5mm^2 (Pin type lugs) 1X0.5mm^2 (min) (Pin / fork type lugs) 1X2.5mm (max) (Pin / fork type lugs)
Screw Clamp tightening torque		0.8 N.m. (nominal recommended) 1.2 N.m(Max)
Short Circuit Protection		4A (gG catridge fuse) (IEC 60947-5-1)
Rated insulation Voltage		Ui = 250V (Degree of pollution 3)
Rated impulse withstand voltage		Uimp = 6kV (IEC 60947-1)
Dielectric Test		2.5KV (IEC 60947-5-1)
Rated insulation resistance		50MΩ (IEC 60947-1)
Vibration Test		15 gn (Frequency 40-500 Hz) (IEC 60068-2-6)
Shock Test		70 gn (½ sine wave for 6ms) (IEC 60068-2-27)
	Emergency stop	15 g (½ sine wave for 11ms) (IEC 60068-2-27)

D. Pilot light with integral LED / multichip LED bulb (BA9S cap)

Current consumptions (applicable to all colours)	
24 VAC/DC, 110 VAC & 240 VAC	max. 20 mA
110 VDC	max. 10 mA
220 VDC	max. 10 mA
Service life (at nominal voltage & at ambient temperature of 25 ° C)	50,000 hours
Voltage limits (nominal voltage)	< 20% of rated voltage >
Short circuit protection	on specific request
Terminal capacity	min. 1 x 0.5 mm2, max. 2 x 1.5 mm2 or 1 x 2.5 mm2

TEKNIC

22.5 Ø - PUSH BUTTONS WITH INTEGRATED CONTACTS

MOMENTARY FLUSH PUSH BUTTONS

ASSEMBLY DETAILS

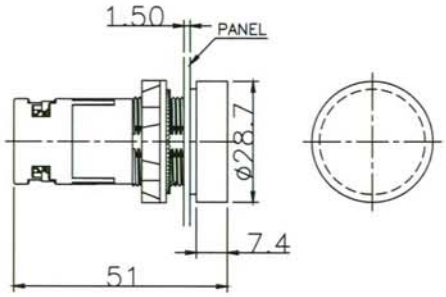

TYPE	COLOUR	ORDERING CODE	COLOUR	ORDERING CODE	COLOUR	ORDERING CODE	COLOUR	ORDERING CODE	COLOUR	ORDERING CODE	COLOUR	ORDERING CODE
Flush push button with 1 NO contact element	○	3PSF110	●	3PSF210	●	3PSF310	●	3PSF410	●	3PSF610	●	3PSF810
Flush push button with 1 NC contact element	○	3PSF101	●	3PSF201	●	3PSF301	●	3PSF401	●	3PSF601	●	3PSF801
Flush push button with 1 NO + 1NC contact element	○	3PSF111	●	3PSF211	●	3PSF311	●	3PSF411	●	3PSF611	●	3PSF811
Flush push button with 2 NO contact element	○	3PSF120	●	3PSF220	●	3PSF320	●	3PSF420	●	3PSF620	●	3PSF820
Flush push button with 2 NC contact element	○	3PSF102	●	3PSF202	●	3PSF302	●	3PSF402	●	3PSF602	●	3PSF802

LATCHING FLUSH PUSH BUTTONS

ASSEMBLY DETAILS

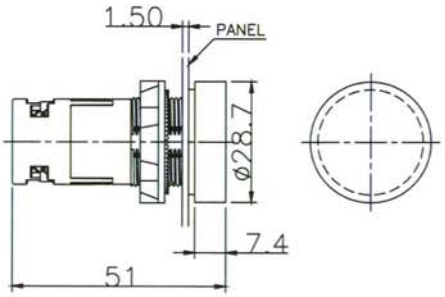

TYPE	COLOUR	ORDERING CODE	COLOUR	ORDERING CODE	COLOUR	ORDERING CODE	COLOUR	ORDERING CODE	COLOUR	ORDERING CODE	COLOUR	ORDERING CODE
Flush push-push push button with 1NO contact element	○	3PSFPP110	●	3PSFPP210	●	3PSFPP310	●	3PSFPP410	●	3PSFPP610	●	3PSFPP810
Flush push-push push button with 1NC contact element	○	3PSFPP101	●	3PSFPP201	●	3PSFPP301	●	3PSFPP401	●	3PSFPP601	●	3PSFPP801
Flush push-push push button with 1NO + 1NC contact element	○	3PSFPP111	●	3PSFPP211	●	3PSFPP311	●	3PSFPP411	●	3PSFPP611	●	3PSFPP811
Flush push-push push button with 2NO contact element	○	3PSFPP120	●	3PSFPP220	●	3PSFPP320	●	3PSFPP420	●	3PSFPP620	●	3PSFPP820
Flush push-push push button with 2NC contact element	○	3PSFPP102	●	3PSFPP202	●	3PSFPP302	●	3PSFPP402	●	3PSFPP602	●	3PSFPP802

TEKNIC

22.5 Ø - PUSH BUTTONS WITH INTEGRATED CONTACTS

MOMENTARY PROJECTING PUSH BUTTONS

ASSEMBLY DETAILS

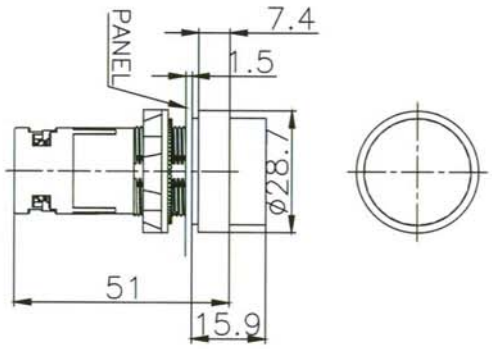

TYPE	COLOUR	ORDERING CODE	COLOUR	ORDERING CODE	COLOUR	ORDERING CODE	COLOUR	ORDERING CODE	COLOUR	ORDERING CODE	COLOUR	ORDERING CODE
Projecting push button with 1 NO contact element	○	3PSP110	●	3PSP210	●	3PSP310	●	3PSP410	●	3PSP610	●	3PSP810
Projecting push button with 1 NC contact element	○	3PSP101	●	3PSP201	●	3PSP301	●	3PSP401	●	3PSP601	●	3PSP801
Projecting push button with 1NO + 1NC contact element	○	3PSP111	●	3PSP211	●	3PSP311	●	3PSP411	●	3PSP611	●	3PSP811
Projecting push button with 2 NO contact element	○	3PSP120	●	3PSP220	●	3PSP320	●	3PSP420	●	3PSP620	●	3PSP820
Projecting push button with 2 NC contact element	○	3PSP102	●	3PSP202	●	3PSP302	●	3PSP402	●	3PSP602	●	3PSP802

LATCHING PROJECTING PUSH BUTTONS

ASSEMBLY DETAILS

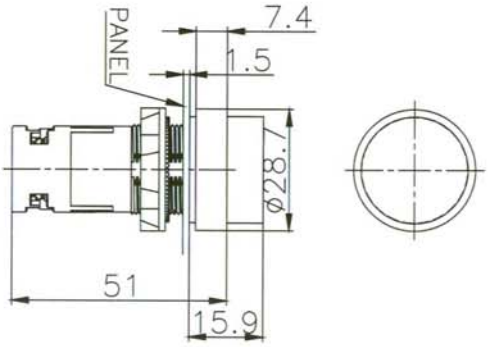

TYPE	COLOUR	ORDERING CODE	COLOUR	ORDERING CODE	COLOUR	ORDERING CODE	COLOUR	ORDERING CODE	COLOUR	ORDERING CODE	COLOUR	ORDERING CODE
Projecting push button with 1 NO contact element	○	3PSPPP110	●	3PSPPP210	●	3PSPPP310	●	3PSPPP410	●	3PSPPP610	●	3PSPPP810
Projecting push button with 1 NC contact element	○	3PSPPP101	●	3PSPPP201	●	3PSPPP301	●	3PSPPP401	●	3PSPPP601	●	3PSPPP801
Projecting push button with 1NO + 1NC contact element	○	3PSPPP111	●	3PSPPP211	●	3PSPPP311	●	3PSPPP411	●	3PSPPP611	●	3PSPPP811
Projecting push button with 2 NO contact element	○	3PSPPP120	●	3PSPPP220	●	3PSPPP320	●	3PSPPP420	●	3PSPPP620	●	3PSPPP820
Projecting push button with 2 NC contact element	○	3PSPPP102	●	3PSPPP202	●	3PSPPP302	●	3PSPPP402	●	3PSPPP602	●	3PSPPP802

TEKNIC

22.5 Ø - PUSH BUTTONS WITH INTEGRATED CONTACTS

LATCHING MUSHROOM PUSH BUTTONS

ASSEMBLY DETAILS

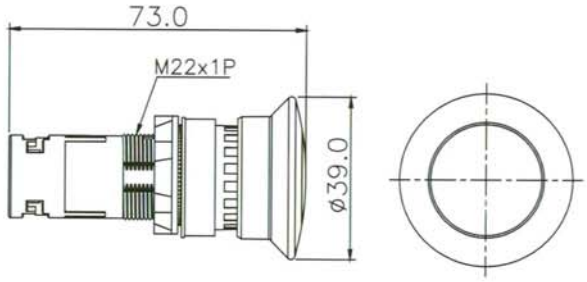

TYPE	COLOUR	ORDERING CODE
Mushroom Latching Ø 40mm with 1 NO contact element	●	3PSML410
Mushroom Latching Ø 40mm with 1 NC contact element	●	3PSML401
Mushroom Latching Ø 40mm with 1NO + 1 NC contact element	●	3PSML411
Mushroom Latching Ø 40mm with 2 NO contact element	●	3PSML420
Mushroom Latching Ø 40mm with 2 NC contact element	●	3PSML402

MOMENTARY MUSHROOM PUSH BUTTONS

ASSEMBLY DETAILS

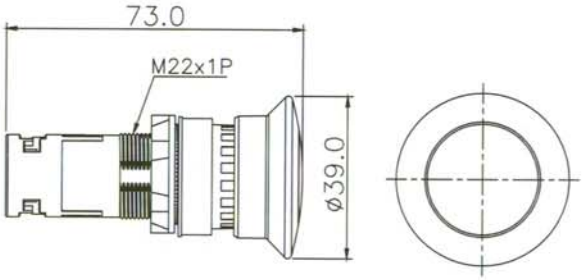

TYPE	COLOUR	ORDERING CODE
Mushroom Momentary Ø 40mm with 1 NO contact element	●	3PSM410
Mushroom Momentary Ø 40mm with 1 NC contact element	●	3PSM401
Mushroom Momentary Ø 40mm with 1 NO + 1 NC contact element	●	3PSM411
Mushroom Momentary Ø 40mm with 2 NO contact element	●	3PSM420
Mushroom Momentary Ø 40mm with 2 NC contact element	●	3PSM402

TEKNIC

22.5 Ø - PUSH BUTTONS WITH INTEGRATED CONTACTS

SELECTOR - 2 POSITION PUSH BUTTONS

ASSEMBLY DETAILS

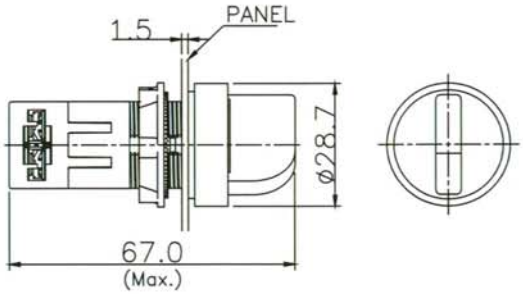

TYPE	COLOUR	ORDERING CODE
Selector push button, 2 position, with 1NO contact element	●	3PSS210-2P
Selector push button, 2 position, with 1NC contact element	●	3PSS201-2P
Selector push button, 2 position, with 1 NO + 1 NC contact element	●	3PSS211-2P
Selector push button, 2 position, with 2 NO contact element	●	3PSS220-2P
Selector push button, 2 position, with 2 NC contact element	●	3PSS202-2P

SELECTOR - 3 POSITION PUSH BUTTONS

ASSEMBLY DETAILS

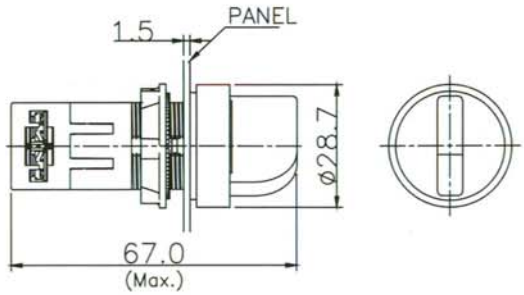

TYPE	COLOUR	ORDERING CODE
Selector push button, 3 position, with 2 NO contact element	●	3PSS220-3P
Selector push button, 3 position, with 2 NC contact element	●	3PSS202-3P

TEKNIC

22.5 Ø - PUSH BUTTONS WITH INTEGRATED CONTACTS

KEY SELECTOR - 2 POSITION PUSH BUTTONS

ASSEMBLY DETAILS

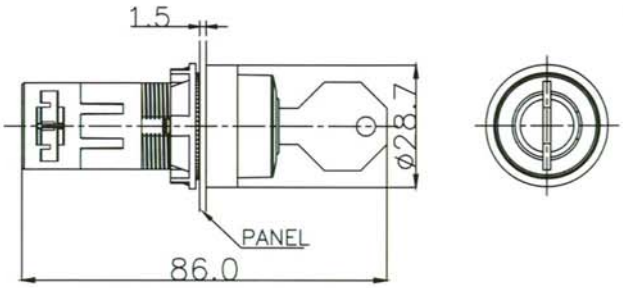

TYPE	COLOUR	ORDERING CODE
Key selector push button 2 position, with 1NO contact element	●	3PSK210-2PO
Key selector push button 2 position, with 1NC contact element	●	3PSK201-2PO
Key selector push button 2 position, with 1 NO + 1 NC contact element	●	3PSK211-2PO
Key selector push button 2 position, with 2 NO contact element	●	3PSK220-2PO
Key selector push button 2 position, with 2 NC contact element	●	3PSK202-2PO

Note : 2PO indicates key removable in left position.

KEY SELECTOR - 3 POSITION PUSH BUTTONS

ASSEMBLY DETAILS

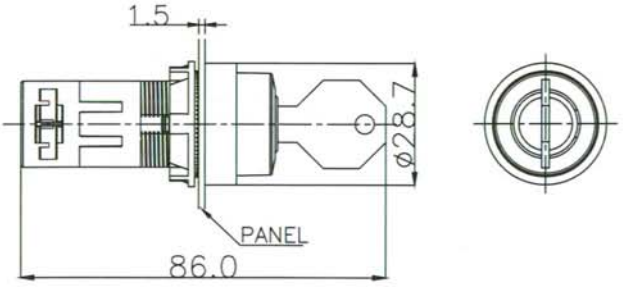

TYPE	COLOUR	ORDERING CODE
Key selector push button 3 position, with 2 NO contact element	●	3PSK220-3PC
Key selector push button 3 position, with 2 NC contact element	●	3PSK202-3PC

Note : 3PC indicates key removable in centre position.

TEKNIC

22.5 Ø - PILOT LIGHTS WITH INTEGRAL LED

LED PILOT LIGHTS

ASSEMBLY DETAILS

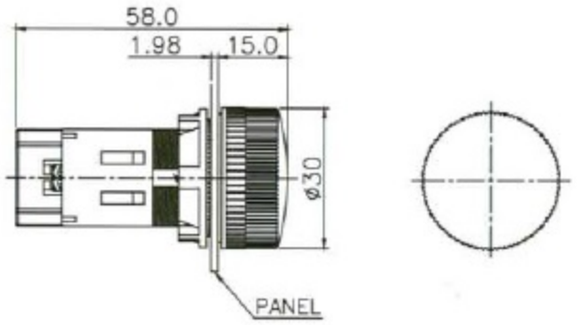

SPECIFIC VOLTAGE

VOLTAGE	COLOUR	ORDERING CODE	COLOUR	ORDERING CODE	COLOUR	ORDERING CODE	COLOUR	ORDERING CODE	COLOUR	ORDERING CODE
24 AC/DC	○	3PLBR1L (S)24	●	3PLBR3L24	●	3PLBR4L24	●	3PLBR5L24	●	3PLBR6L24
	○	3PLBR7L(S)24	●	3PLBR8L24	○ Translucent Lens / White LED			○ Transparent Lens / White LED		
110 AC	○	3PLBR1L(S)110AC	●	3PLBR3L110AC	●	3PLBR4L110AC	●	3PLBR5L110AC	●	3PLBR6L110AC
	○	3PLBR7L(S)110AC	●	3PLBR8L110AC	○ Translucent Lens / White LED			○ Transparent Lens / White LED		
110 DC	○	3PLBR1L(S)110DC	●	3PLBR3L110DC	●	3PLBR4L110DC	●	3PLBR5L110DC	●	3PLBR6L110DC
	○	3PLBR7L(S)110DC	●	3PLBR8L110DC	○ Translucent Lens / White LED			○ Transparent Lens / White LED		
240 AC	○	3PLBR1L(S)240AC	●	3PLBR3L240AC	●	3PLBR4L240AC	●	3PLBR5L240AC	●	3PLBR6L240AC
	○	3PLBR7L(S)240AC	●	3PLBR8L240AC	○ Translucent Lens / White LED			○ Transparent Lens / White LED		
220 DC	○	3PLBR1L(S)220DC	●	3PLBR3L220DC	●	3PLBR4L220DC	●	3PLBR5L220DC	●	3PLBR6L220DC
	○	3PLBR7L(S)220DC	●	3PLBR8L220DC	○ Translucent Lens / White LED			○ Transparent Lens / White LED		

Note: Other voltages namely 12 V, 30 V, 48 V, 63.5 V, 125 V DC & 277 V AC available on request

UNIVERSAL VOLTAGE

VOLTAGE	COLOUR	ORDERING CODE	COLOUR	ORDERING CODE	COLOUR	ORDERING CODE	COLOUR	ORDERING CODE	COLOUR	ORDERING CODE
24-240 AC/DC	○	3PLBR1L(S)U	●	3PLBR3LU	●	3PLBR4LU	●	3PLBR5LU	●	3PLBR6LU
	○	3PLBR7L(S)U	●	3PLBR8LU	○ Translucent Lens / White LED			○ Transparent Lens / White LED		

DUAL COLOUR

VOLTAGE	COLOUR	ORDERING CODE	
24 V AC/DC 48 V AC/DC 110 V AC 110 V DC 240 V AC 220 V DC	○ Translucent Lens ● Green LED ● Red LED	3PLBR134L	Note: a) 1- Translucent Lens 3- Green LED 4- Red LED b) Mention Voltage after ordering code c) Other LED combinations available on request

TEKNIC 703, Madhava, Bandra Kurla Complex, Bandra East, Mumbai - 400 051.
Tel.: 022-42532500 Fax: 022-26592391 Email: teknic@teknic.co.in www.teknic.co.in

CH:MT:05
REV: B